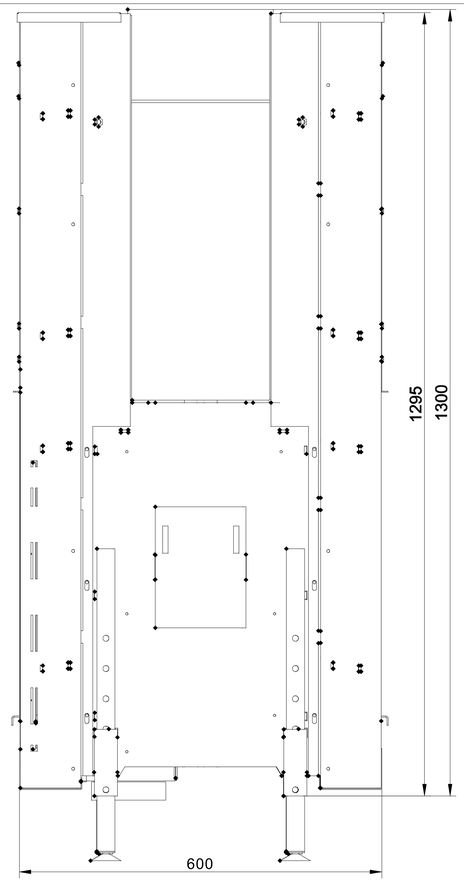

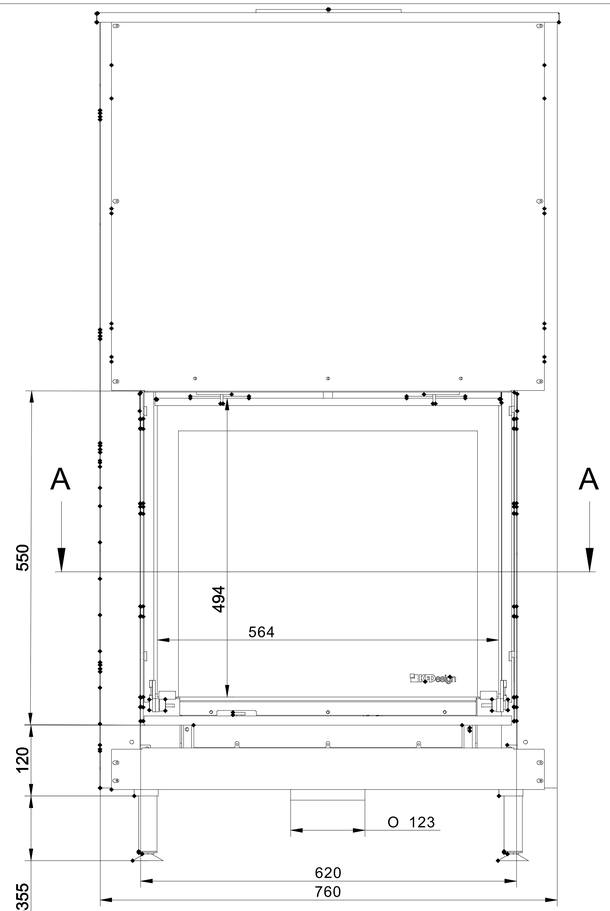

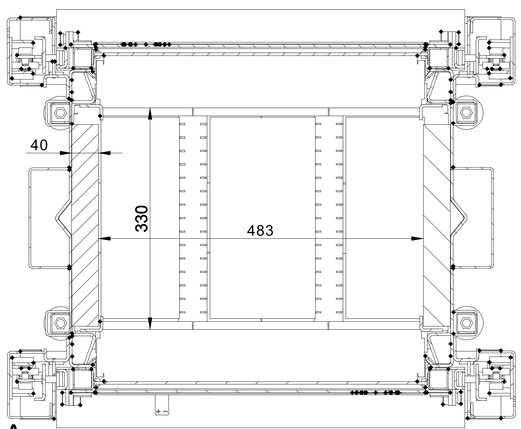

SECTION A-A

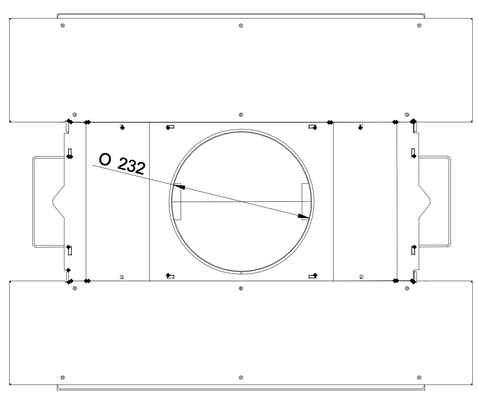

Podane wymiary sąwymiarami orientacyjnymi
All dimensions are approximate

	NAME	DATE
DRAWN	GM	08/18
CHECKED		
ENG		
MGR		
APPR		

KFD SP. Z O.O.
ul. Olszankowa 51
05-120 Legionowo, POLAND

TITLE
KFDesign LINEA DF V810 3.0

SIZE **A2** | DWG NO | REV

FILE NAME: LINEA_DF_V810_3.0.dft

SCALE: | WEIGHT: